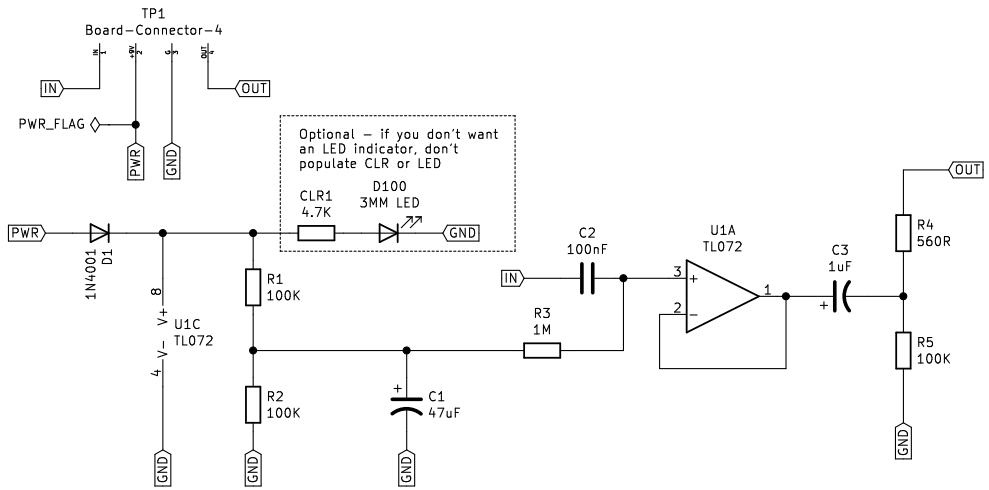

Five Cats Pedals

Sheet: /
File: K-Buffer.sch

Title: K-Buffer

Size: A4	Date: 2023-03-30	**Rev: 1.0**
KiCad E.D.A. eeschema (5.1.12)-1		Id: 1/1