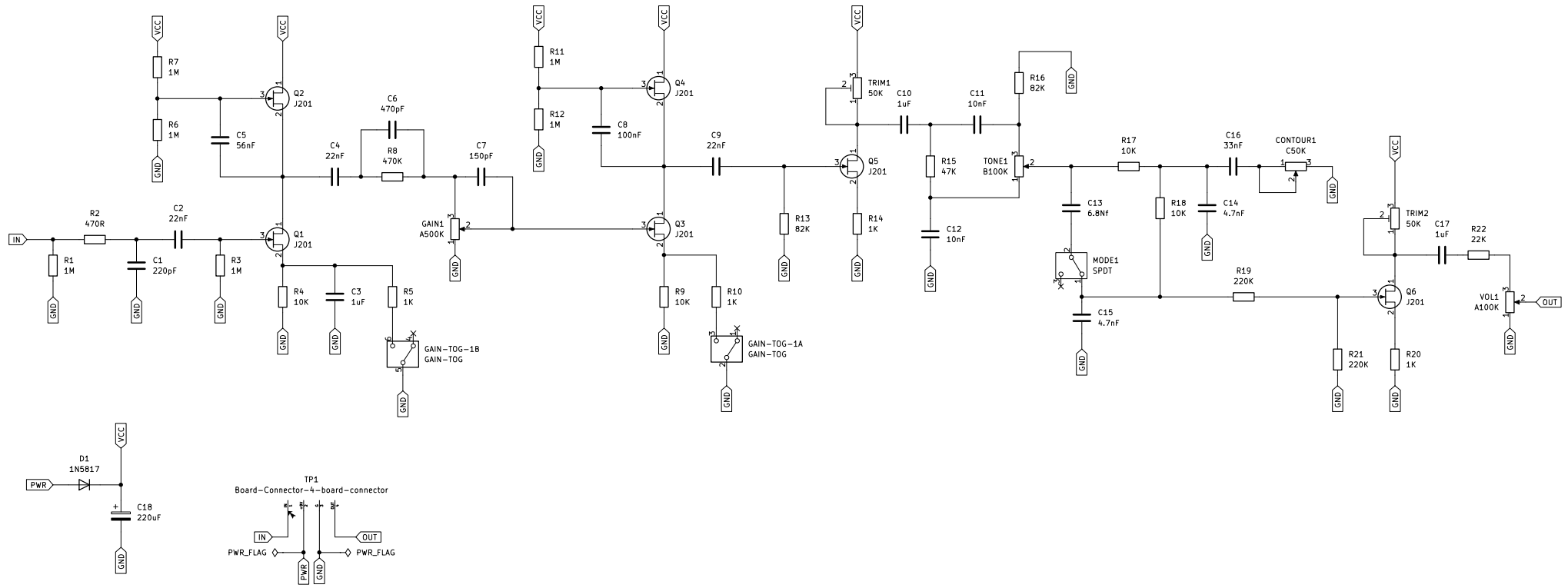

Compares to : Wampler Pinnacle

Five Cats Pedals

Sheet: /

File: Summit-Distortion.kicad_sch

Title: Summit Disortion

Size: A3	Date: 2025-12-08	**Rev: 1.0**
KiCad E.D.A. 8.0.1		Id: 1/1