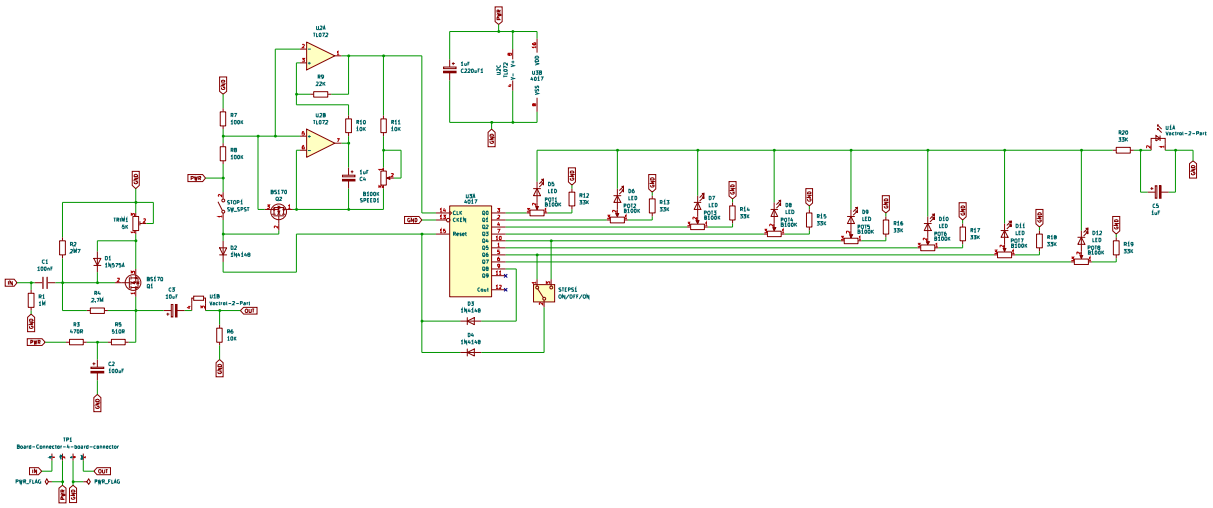

Changes on Five Cats Pedals

Five Cats Pedals

Sheet: /

File: Z-Trem.kicad_sch

Title: Z-Trem

Size: A2	Date: 2026-01-29	Rev: 1.1
KiCad E.D.A. 8.0.9		Id: 1/1